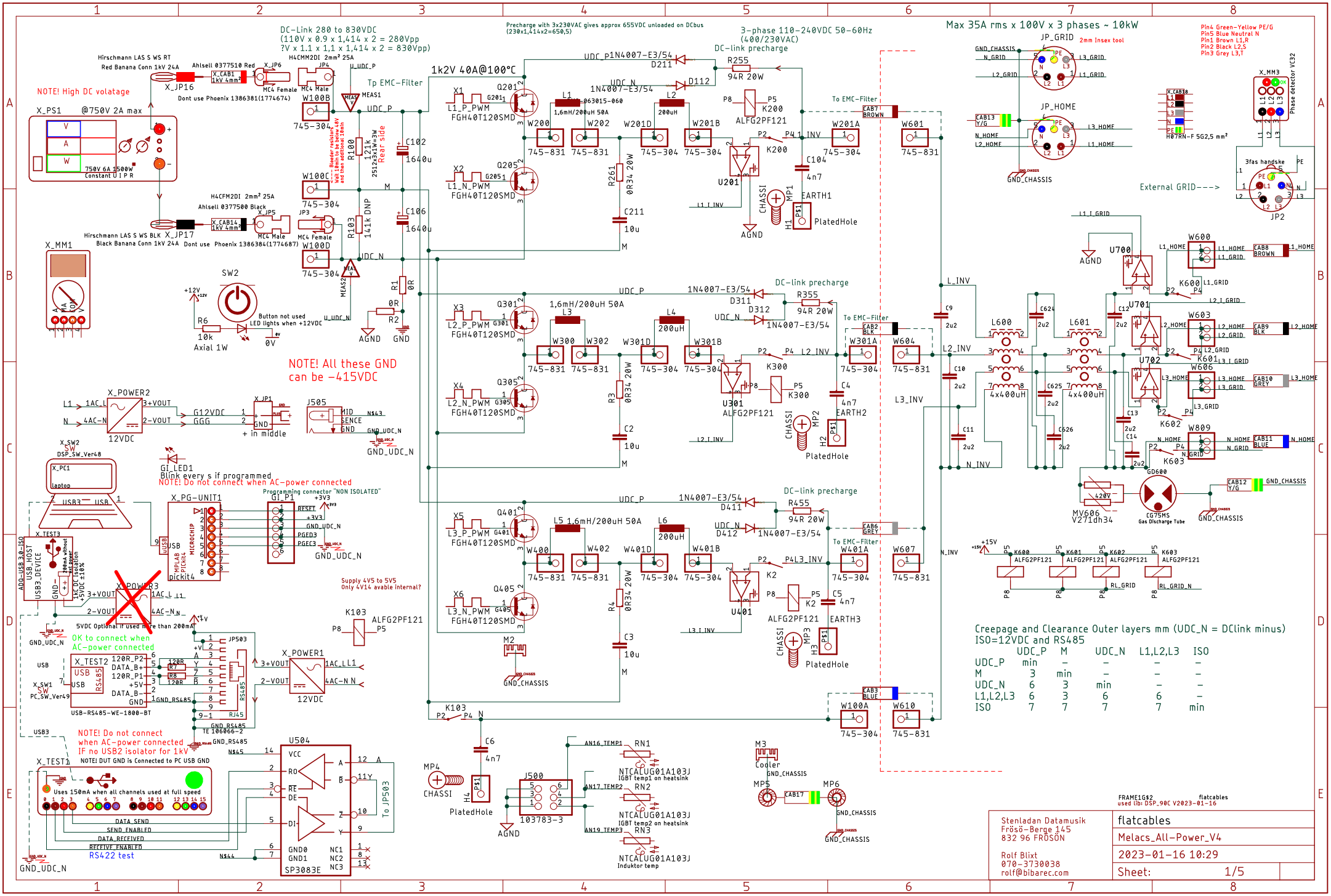
DC-Link 280 to 830VDC
(110V x 0.9 x 1,414 x 2 = 280Vpp
?V x 1.1 x 1,1 x 1,414 x 2 = 830Vpp)
Precharge with 3x230VAC gives approx 655VDC unloaded on DCbus
(230x1,414x2=650,5)
3-phase 110-240VDC 50-60Hz
(400/230VAC)
DC-link precharge
Max 35A rms x 100V x 3 phases ~ 10kW
1k2V 40A@100°C
NOTE! High DC volatage
X_PS1 @750V 2A max
750V 6A 1500W
Constant U I P R
Hirschmann LAS S WS RT
Red Banana Conn 1kV 24A
X_JP16
Dont use Phoenix 1386381(1774674)
Hirschmann LAS S WS BLK
Black Banana Conn 1kV 24A
X_JP17
Dont use Phoenix 1386384(1774687)
Tp EMC-Filter
Rear side
NOTE! All these GND
can be -415VDC
X_MM1
SW2
Button not used
LED lights when +12VDC
Axial 1W
X_POWER2
12VDC
G12VDC
GGG
+ in middle
J505
GND_UDC_N
X_SW2
DSP_SW_Ver48
GI_LED1
Blink every s if programmed
NOTE! Do not connect when AC-power connected
Programming connector "NON ISOLATED"
X_PG-UNIT1
GI_P1
X_POWER3
5VDC Optional if used more than 200mA
OK to connect when
AC-power connected
X_TEST2
USB-RS485-WE-1800-BT
Supply 4V5 to 5V5
Only 4V14 avable internal?
K103
ALFG2PF121
X_POWER1
12VDC
NOTE! Do not connect
when AC-power connected
IF no USB2 isolator for 1kV
NOTE! DUT GND is Connected to PC USB GND
X_TEST1
Uses 150mA when all channels used at full speed
DATA_SEND
SEND_ENABLED
DATA_RECEIVED
RECEIVE_ENABLED
RS422 test
U504
SP3083E
To JP503
GND_UDC_N
JP_GRID
JP_HOME
2mm Insex tool
H07RN-F 5G2,5 mm²
Pin4 Green-Yellow PE/G
Pin5 Blue Neutral N
Pin1 Brown L1,R
Pin2 Black L2,S
Pin3 Grey L3,T
X_MM3
Phase detector VC32
3fas handske
External GRID--->
JP2
GND_CHASSIS
U700
U701
U702
MV606
V271dh34
GD600
CG75MS
Gas Discharge Tube
Creepage and Clearance Outer layers mm (UDC_N = DClink minus)
ISO=12VDC and RS485
UDC_P M UDC_N L1,L2,L3 ISO
UDC_P min – – – –
M 3 min – – –
UDC_N 6 3 min – –
L1,L2,L3 6 3 6 6 –
ISO 7 7 7 7 min
Stenladan Datamusik
Frösö-Berge 145
832 96 FRÖSÖN
Rolf Blixt
070-3730038
rolf@bibarec.com
flatcables
Melacs_All-Power_V4
2023-01-16 10:29
Sheet: 1/5